MIGNON STARK

17/07/2024

ESGR-2322-01v2146
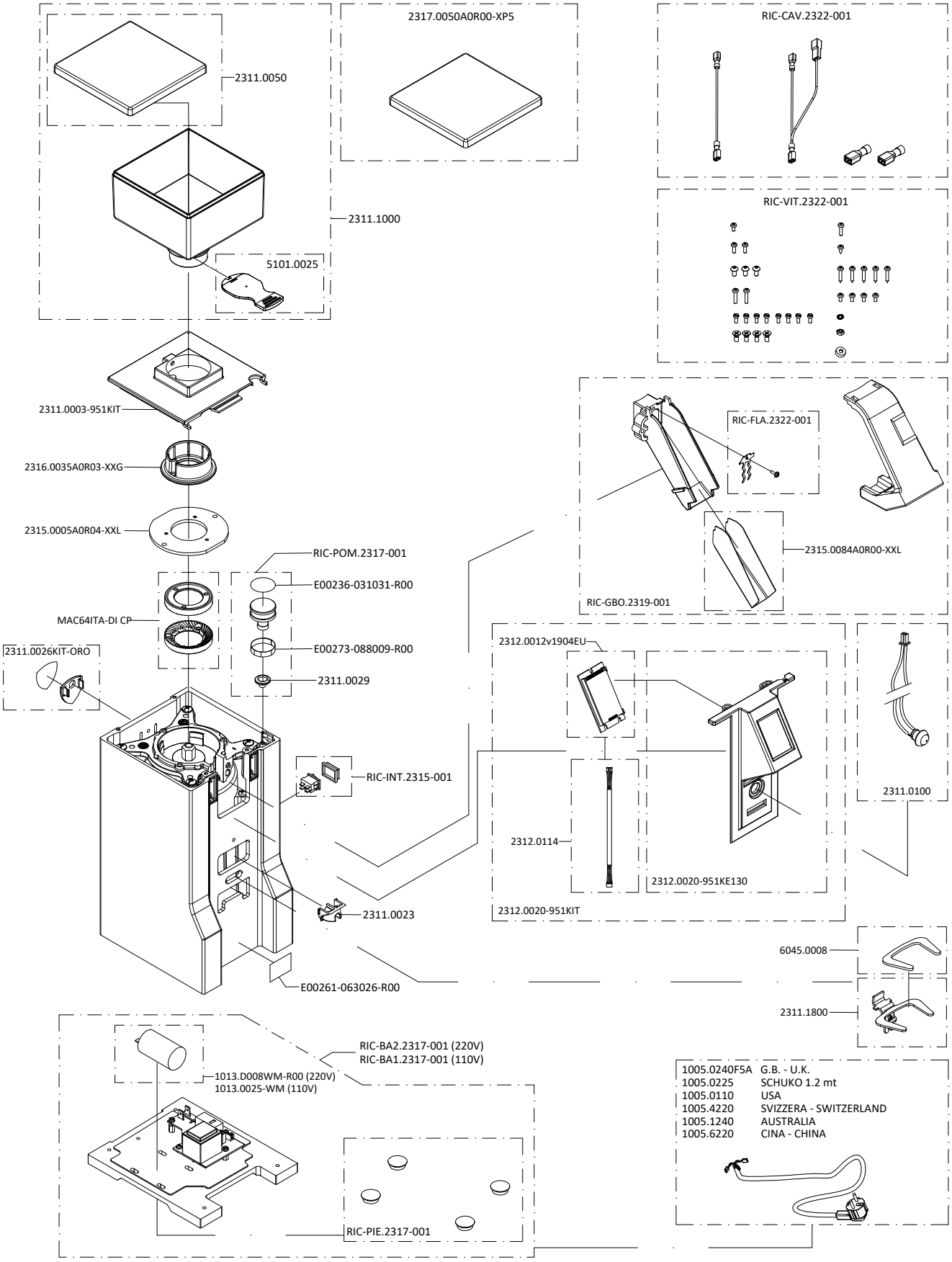
110V/60Hz - 220V/60Hz - 220-230V/50Hz - 230-240V/50Hz